FRONT BUMPER

COMPONENTS
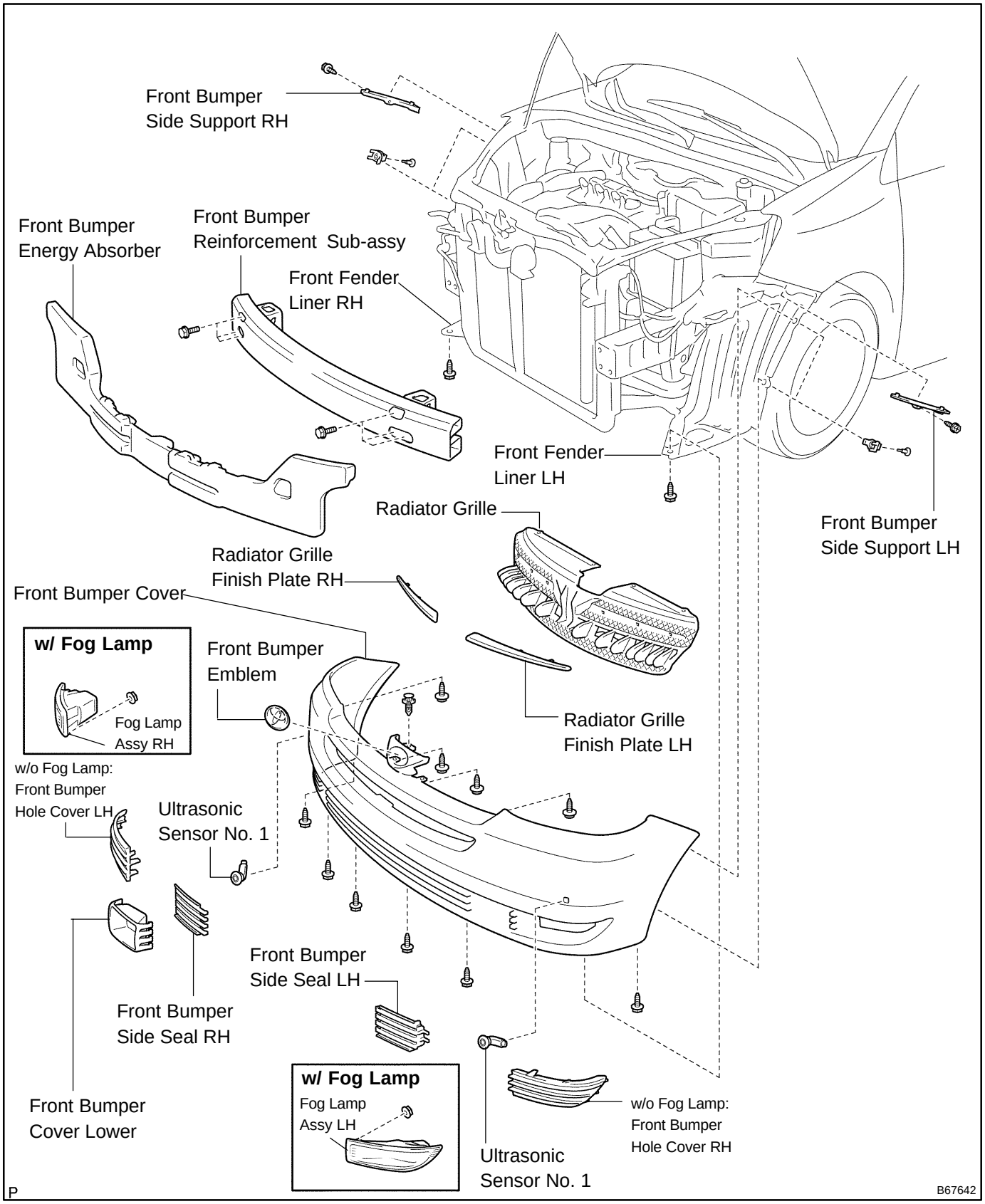
760VD-01